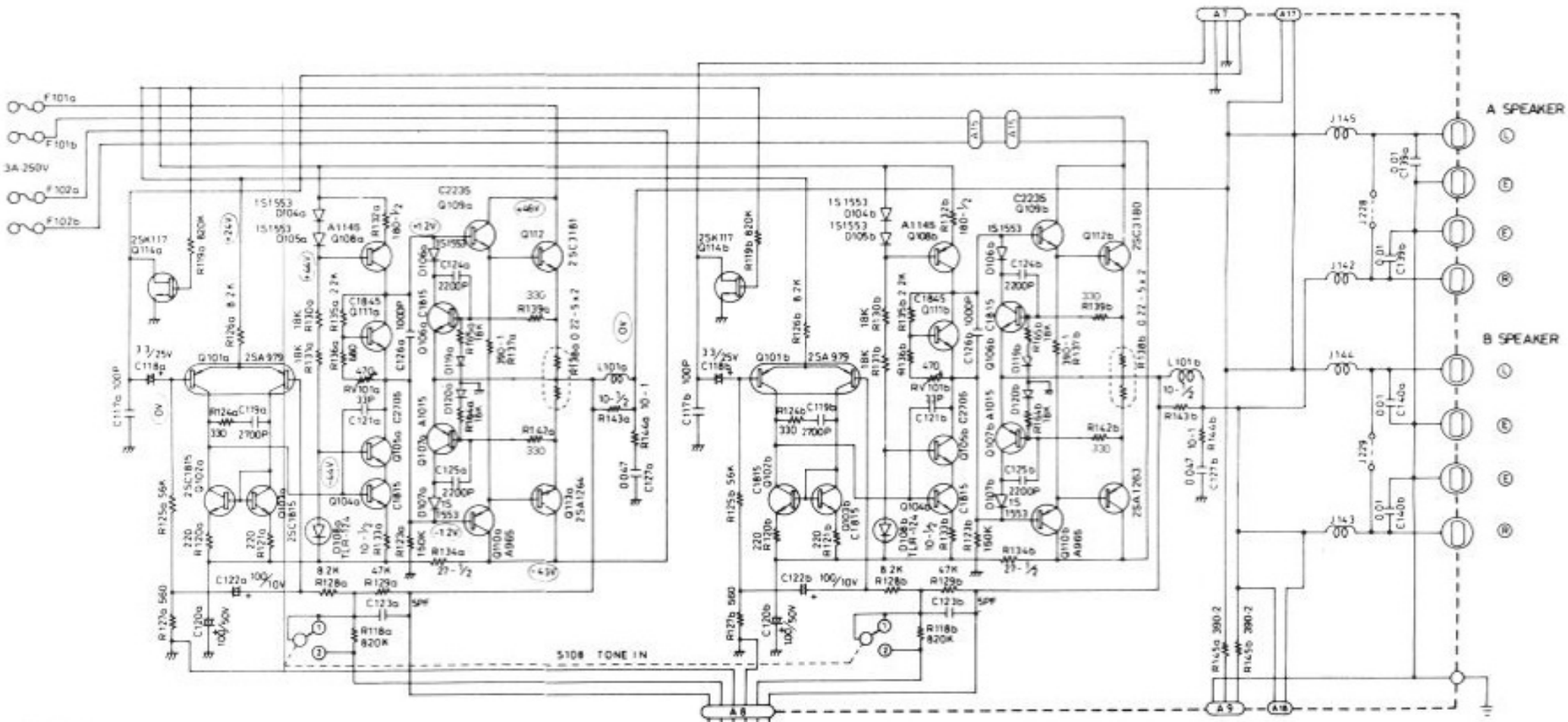

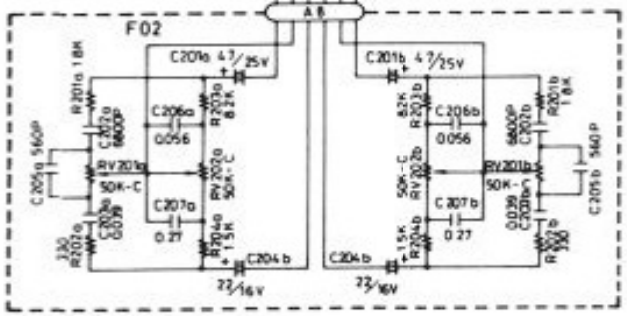

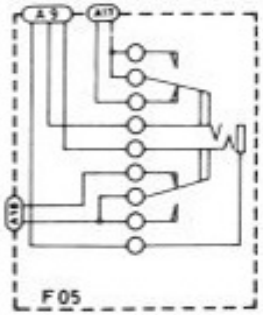

D119a, b 1S1553
D120a, b 1S1553

Remarks

1. Unless otherwise specified, all resistors are in OHM ¼ watt, all capacitors in micro farad.
2. Transistors and diodes may be replaced with any type having comparable ratings.
3. Due to continued improvments LUX reserve the circuit or specifications.

L-215

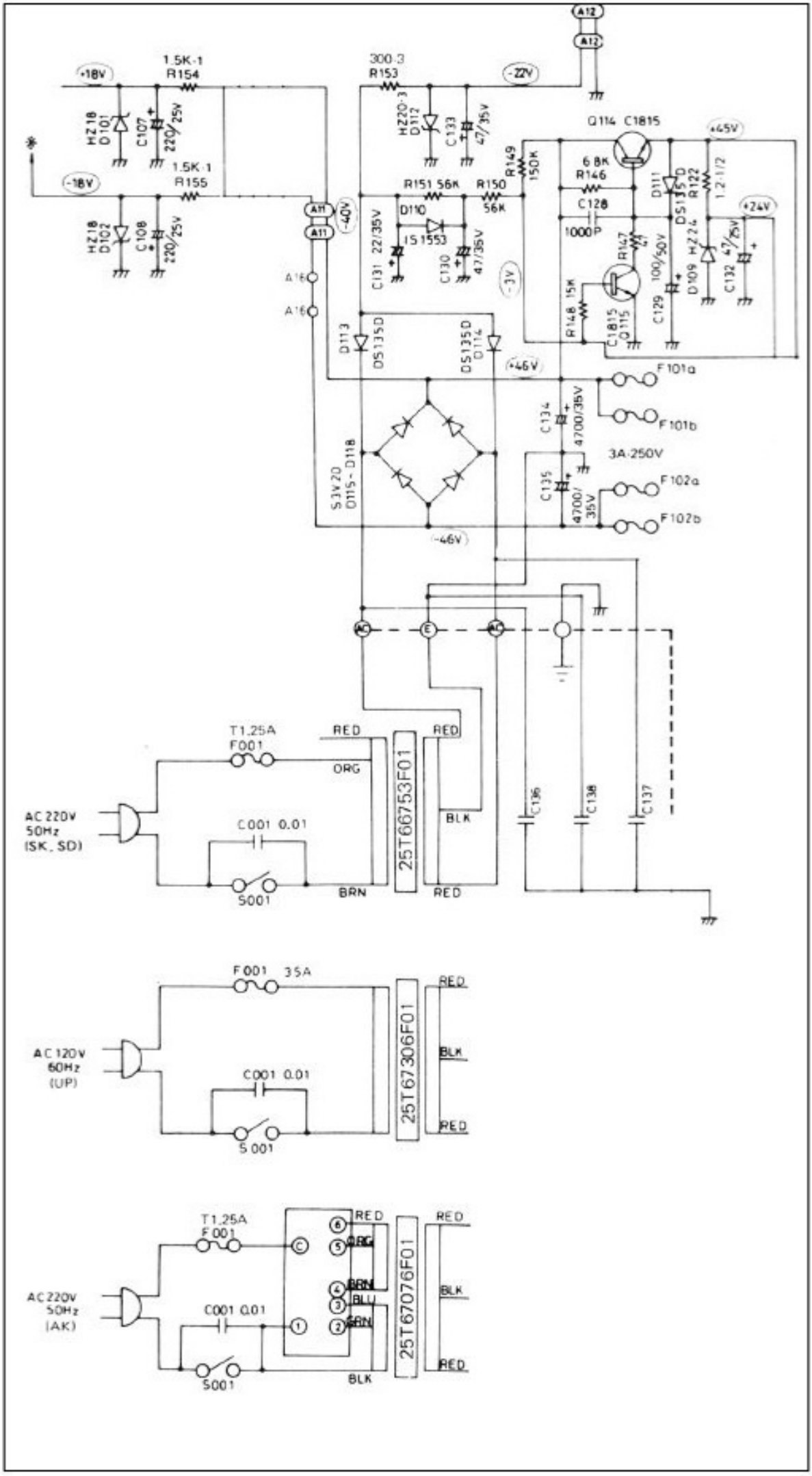
+18V
-18V
1.5K-1
R154
1.5K-1
R155
HZ18
D101
HZ18
D102
C107
220/25V
C108
220/25V
300-3
R153
-22V
HZ20-3
D112
C133
47/35V
Q114 C1815
+45V
R149
150K
6.8K
R146
C128
1000P
R151 56K
R150
56K
D110
1S1553
C131 22/35V
C130
47/35V
-40V
-3V
D111
DS135D
R122
1.2-1/2
+24V
R147
41
R148 15K
C1815
Q115
C129
100/50V
D109
HZ24
C132
47/25V
A12
A11
A16
D113
DS135D
DS135D
D114
+46V
F101a
F101b
C134
4700/35V
3A-250V
S3V20
D115~D118
C135
4700/35V
F102a
F102b
-46V
T1.25A
F001
RED
ORG
C001 0.01
S001
BRN
25T66753F01
RED
BLK
RED
AC 220V
50Hz
(SK, SD)
C136
C138
C137
F001 3.5A
AC 120V
60Hz
(UP)
C001 0.01
S 001
25T67306F01
RED
BLK
RED
T1.25A
F001
RED
ORG
BRN
BLU
BRN
AC 220V
50Hz
(AK)
C001 0.01
S001
BLK
25T67076F01
RED
BLK
RED